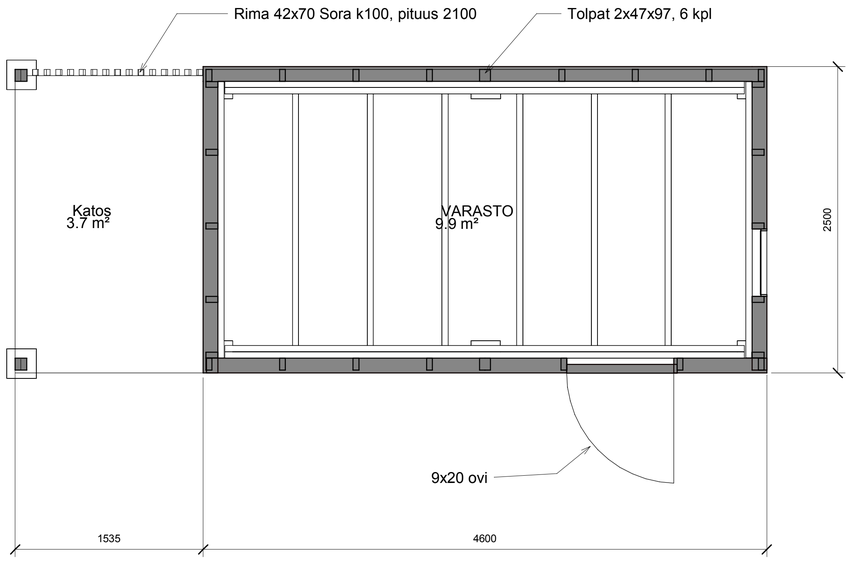

1 Pohja
1 : 25

RAKENNUSOIKEUSLASKELMA

11,5 m2

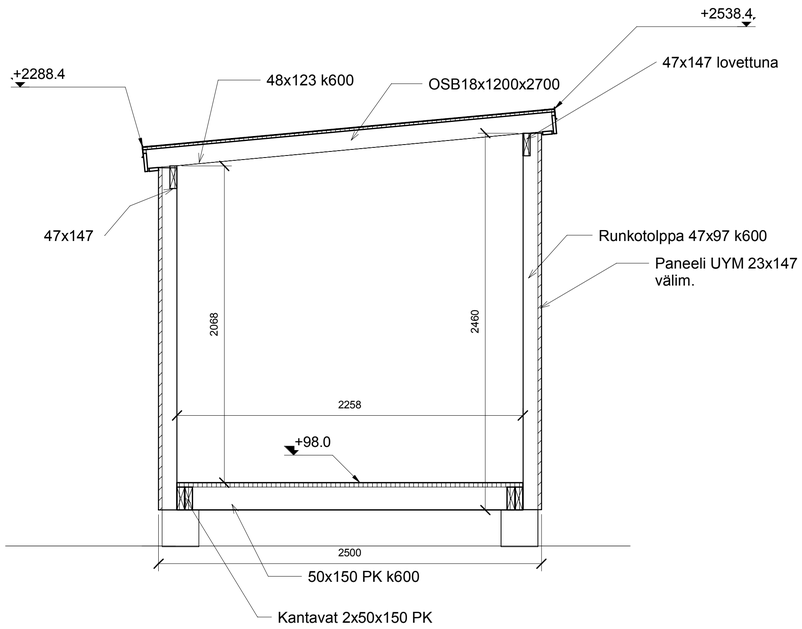

2 Leikkaus
1 : 20

YP

Pintakermi
OSB 18 mm
Kattokannattajat 47x122 k600

US

47x97 runko k600
23x145 vaakapaneeli UYM

AP

50x150 PK k600
28x120 PK lauta

Consultant
Address
Address
Phone
Fax
e-mail

Consultant
Address
Address
Phone
Fax
e-mail

Consultant
Address
Address
Phone
Fax
e-mail

Consultant
Address
Address
Phone
Fax
e-mail

No.	Description	Date

Pyhtilänraitti 9F
Ulkovarasto
Aunola

POHJA JA LEIKKAUS

Project number	0001
Date	27.10.2023
Drawn by	U.Myllymäki
Checked by	U.Myllymäki
A1	
Scale	As indicated

27/10/2023 15.08.48